Waste to Energy

USPTO Patent Granted Gasification Solution

GPE LLC


Clean environment,
Eco-friendly future energy production.
It is GPE LLC's vision.
Waste is a sustainable Energy.

GPE LLC

GPE LLC Company Profile

GPE LLC is a global provider of RST gasification technology and a green WTE consulting company in the United States. We operate internationally through our offices in Seoul, South Korea, Shenzhen, China, Hong Kong and plan to expand in South East Asian countries, Africa and Middle East.

Our business philosophy is based on the accomplishment of consulting clients on successful ways of waste management. It is our vision to provide clean environment and eco-friendly energy production.

Management Directory:

- Young Park, President and CEO, Electronic Engineer, Orlando, FL U.S.A.
- Jonathan Tia, Business Partner, Bangkok, Thailand and South East Asia
- Sow Thong, Business Partner, China, Africa and Middle East
- Il Park, President of O&M, Seoul, Korea
- Jib Kim, General Manager, Seoul, Korea
- Chaweewan Wichupanan, Chief Technology Officer, Thailand
- Joanna Xui, Chief Operating Officer of China Operations, Shenzhen, China
- Edward McCartin, Co-op business partner and legal advisor, Hong Kong

Corporate Values

GPE LLC Commits to:

- Adopting high standards of ethics in all its business practices
- Providing its customers with high quality services, tailor-made to their needs and expectations
- Guaranteeing highly competitive services to its clients
- Engaging highly skilled personnel supported by an effective organizational structure

Scope of Work

GPE LLC is a global green WTE technology provider as well as waste management consulting company.
GPE LLC provides state of the art WTE technology that generates 45% more electricity than any other WTE technologies that is currently on the market. Our technology requires no fuel, no pre-sorting or pre-treatment of MSW and requires no need for landfill. All by-products are non-toxic and 100% recyclable.

Environmental Policy

As a responsible corporate entity, GPE LLC is committed to protecting the environment in compliance with the environmental laws and the practices of the communities where it operates. While pursuing our activities we endeavor to minimize any adverse impact on air, water and land by means of pollution prevention and energy and water conservation.

General Policy

GPE LLC recruits well educated, flexible and ambitious people who thrive on change and challenge are innovative, self-confident and accept responsibility by taking initiative and adapting to a stimulating international working environment.
GPE LLC internationally recruits people from various nationalities, in order to allow for a transfer of experiences and bring people of different cultures together to achieve a common goal.

Equal Opportunities

GPE LLC is an equal opportunity employer and applies an Equal Opportunities Policy for this purpose. This policy covers all aspects of employment, from advertising of vacancies, selection, recruitment and training to working conditions and reasons for termination of employment.

About 1.3 billion tones of solid waste is generated globally each year.

Waste management must become more environmentally responsible.
The future of waste management must address the growing population, Which will increase waste volumes and the types of waste produced.

GPE LLC is providing an environmentally superior waste management solution to landfill.

GPE LLC

Waste is a World-Wide Issue

Landfills are near capacity

Landfills are being closed daily

The waste is seeping into our water
With current methods we can not manage our waste properly

Current Technologies

Most technologies require large amounts of land
They are very costly to build
They require costly fuel to operate
They reduce, but do not remove waste from Landfills
The most popular forms are still burn and bury
They still send toxic waste to Landfills
They do not meet emissions standards
They operate at a deficit
They are not adaptable to meet individual regions' needs for waste management

RST Technology—The Answer

- Small footprint **(3-5 Acres)** and low cost allows multiple plants to be placed where needed
- No additional fuel is needed after start up—**The waste is our fue**l
- RST technology is self sustaining
- All by products are **100% recyclable**—No Landfill
- We produce 45% more electricity than any other method with same feedstock
- Our tipping floor design prevents smell from reaching community
- Our emissions are well below EPA standards
- Our technology actually makes a profit

GPE LLC

waste to energy

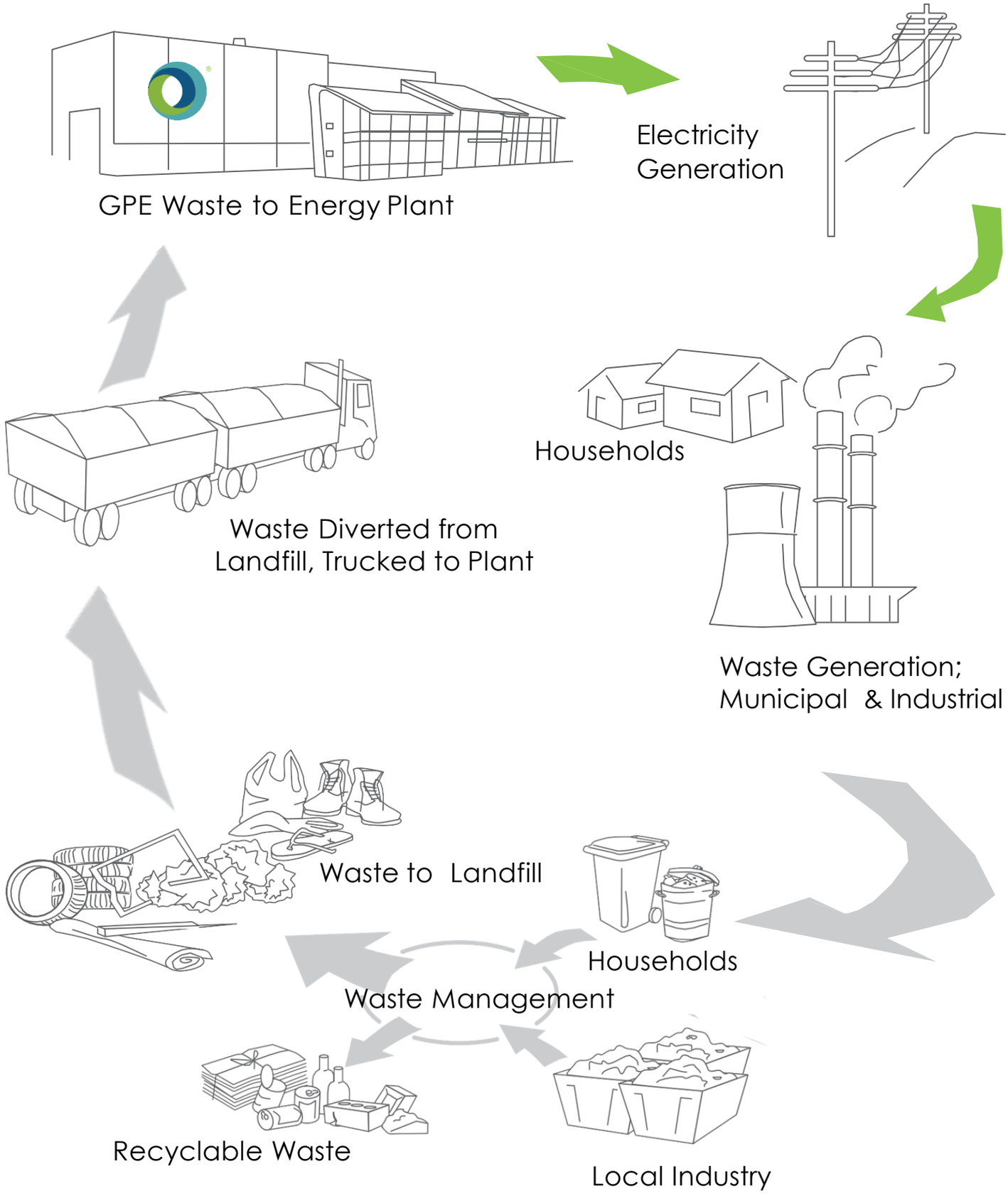

GPE LLC

Patented gasification incinerator plant

Gasification The waste is slowly heated between 600˚F and 850˚F during which small quantities of air and steam are introduced. This breaks up the molecules in the waste, which are converted into a gas. This synthetic gas or 'syngas' contains small molecules such as methane. It is like natural gas with high energy content.

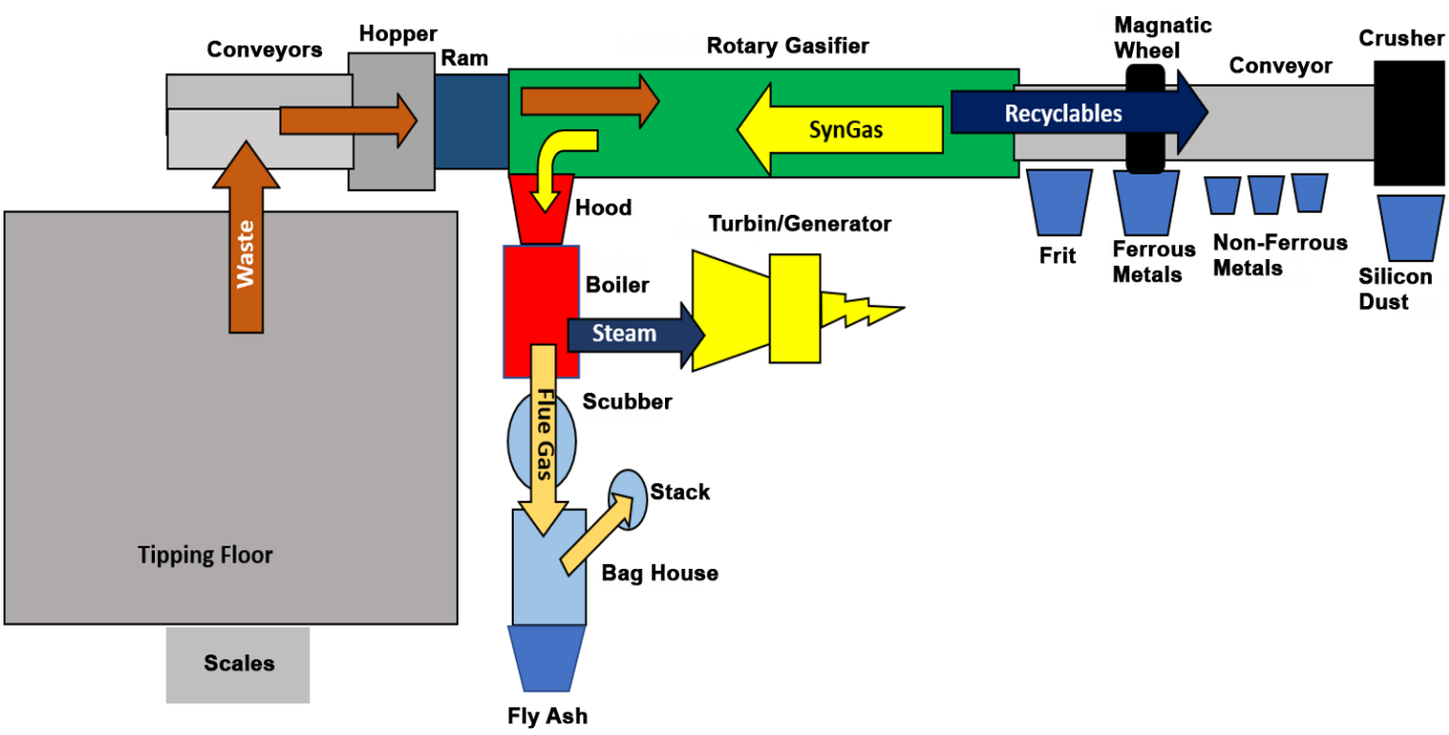

GPE LLC

Energy: The waste's energy content is extracted into the syngas, which is transferred to a burner to heat water producing steam. The steam can be used directly for heating, industry processes or to generate electricity which is fed into the electrical distribution grid for homes, business and industry.

Syngas: The syngas is fired to generate heat, carbon dioxide and water vapour. This exhaust gas is cleaned and filtered to remove traces of metals such as cadmium from batteries, sulphur from rubber, and chlorine from salts, which are absorbed into a stable lime solid or adsorbed onto activated carbon for disposal. The carbon dioxide and water vapour is then safely released to the atmosphere.

RST Technology—The Difference

- We don't burn—We gasify
- All of our organics, food waste, paper, plastics, etc… are turned to Syng as in our Rotary Gasifier
- The Syngas is combusted in our patented Burner/Boiler system, creating s team and then Electricity
- When the Syngas is combusted it destroys 95% of all toxins in the Syngas
- The Scrubber and Bag House removes the rest of the acidic gasses and pollutants
- This is passed on through our stack and released
- Constant Emissions Monitoring **(CEMS)** provides real time read outs to assure we achieve our standards
- Our emissions are well below EPA Standards

RST Technology—The Recyclables

- All other materials are left in tact, clean and ready to be recycled
- Mineral Frit (7%) mixed with our Bag House Fly Ash (2%) used in Asphalt production
- Ferrous and Non-Ferrous Metals are clean and ready to be sold to recycle
- Glass and Ceramics are crushed into silicon dust and used as an additive in concrete production
- The electricity is sold back to the grid per your Power Purchase Agreement (PPA)

RST Technology—The Profit

- The RST plant operates 24 hours a day 7 days a week
- It needs between 24-30 employees to operate
- Our plant operates at a rate of 92% (335 days per year)
- Operations and Maintenance can run approximately $2.5 Million USD pe r year
- Revenues are generated through Tipping Fees, Electricity sold to the grid (PPA) and sale of 100% recyclables
- Depending on your contracts for waste delivery, PPA, and recyclable sales an average 500 tons per day plant can generate between $10,000,000 USD to $16,000,000 USD per year

“Gasification” superior to “Incineration "

- Gasification converts MSW to a usable synthesis gas, “syngas”. Whereas, incineration defined is, render to ash. Instead of making just heat and electricity, as is done in a WTE plant using incineration, the syngas produced by RST gasification process generates more energy with less emissions.
- Typical incineration plants have an energy ratio of 500 kwh/ton of MSW
- RST Patented Process has a more efficient energy conversion process and yields a significantly higher output per ton.
- The RST process extracts 100% of the heating value out of the feedstock
- RST technology also requires no preprocessing of feedstock

The Comparison	Plasma	MG Incineration	RST
Type MSW	All except Nuclear Waste	All except Medical and Nuclear Waste	All-High calorific value best for Syngas production
MSW Size	Shredded	No Restrictions	No restriction—As long as fits in Gasifier
Process Type	Gasification	MG Incineration—Burn & Bury	Low Heat Gasification
Added Fuel	Electric, Coke, Limestone, RDF	Coal or other fuels	None
Syngas	Carbon Monoxide, Hydrogen	N/A	Nitrogen, Carbon monoxide, Carbon Dioxide, Hydrogen, Methane
Emissions Control	No Data—Unproven to meet EPA Standards	Getting better but many Emissions problems	3.2ng/dscm EPA certified
Byproducts	Syngas for Electric prod—Bio Fuels Steam—Hot Water, Commercial & Residential use Slag—Rock wool, Concrete blocks, bricks, tile, gravel, paper	Syngas—High grade fuels, chemicals	Frit/Fly Ash—Asphalt Silicon Dust—Concrete Ferrous & Non-Ferrous Metals—Recyclable
Hazardous Off Products	2% Ash to Landfill-Slag no evidence to pass TCLP testing	2% Bottom Ash—2% Fly Ash to Landfill—Reports show higher ash content to Landfill	None—100% Recyclables
O&M	$8+M py—300 tpd	$200,000 pd	$2.5M USD/year
Tonnage	300tpd		200-500tpd
Electricity Output	Industry Standard ≥ 500kwh/ton to 1000kwh/t--Unproven	Industry Standard ≥ 500kwh/ton	776kwh/t MSW per >25% moisture
Footprint	No Data	10 Acres per 500tpd w/o Coal Storage (35 Acres w/coal storage)	3-5 Acres
Cost	$200+M	$150M - 200tpd	$72M - 500tpd
Yearly Profit	No	No	Yes

Fast-growing segment

According to a report from Pike Research entitled "Waste-to-Energy Technology Markets"(1/11), worldwide revenues from WTE systems will enter a period of strong growth in 2012, increasing from

$3.7 billion in 2010 to nearly $13.6 billion by 2016

Waste-to-Energy Revenue by Region, World Markets: 2010-2016

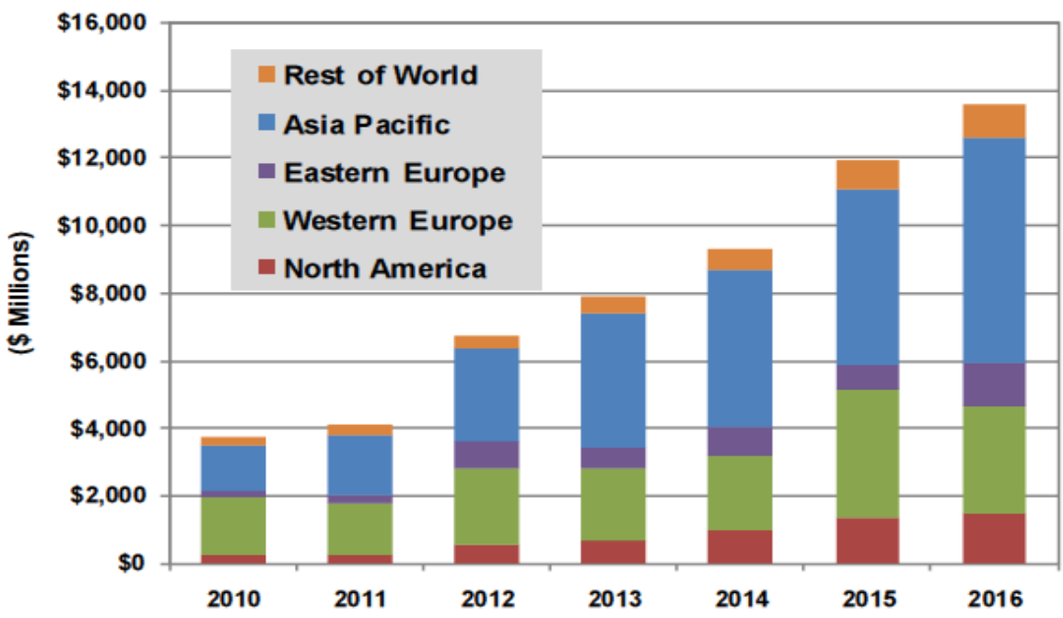

(Source: Pike Research)

USPTO Patent

1. United States Patent No. 6,932,002
Date: August 23, 2005 Inventors: David F. May, David F. May, Jr., and John W. Burke, Jr.
Assignee: Recycling Solutions Technology, LLC
Appl. No.: 10/654,673 Filed: September 4, 2003
Brief description: System and method of processing solid waste
Abstract:
A system and associated method of processing solid waste via a waste gasification process results in usable by-products.
The method utilizes a rotary kiln heated to a temperature of at least 800.degree.F. and a reduction chamber, heated to a temperature of at least 1800.degree.F.
The solid waste is slowly rotated in the kiln for six to eight hours.
The solid material is passed through screens to separate the ash from other items. Gases are monitored and transported to the reduction chamber to generate power.
The gases are then transported to at least one air pollution control unit to remove contaminants before being vented into the atmosphere.

2. United States Application No.: 13/405,438
Filing Date: February 27, 2012
Confirmation Number: 6323
Applicants/Inventors: David F. May, John Burke Jr., David F. May II, and Paul E.
Aiken Assignment for Published Patent Application: Recycling Solutions Technology, LLC
Title: Process for Generating Combustible Gas from Organic Feedstock and Reactors Therefor.

US009885478B1

(12) **United States Patent**
May et al.

(10) **Patent No.: US 9,885,478 B1**
(45) **Date of Patent: Feb. 6, 2018**

(54) **PROCESS FOR GENERATING COMBUSTIBLE GAS FROM ORGANIC FEEDSTOCK AND REACTORS THEREFOR**

(75) Inventors: **David F. May**, Prestonsburg, KY (US); **John Burke, Jr.**, Prestonsburg, KY (US); **David F. May, II**, Allen, KY (US); **Paul E. Aiken**, Prestonsburg, KY (US)

(73) Assignee: **Recycling Solutions Technology, LLC**, Prestonburg, KY (US)

(*) Notice: Subject to any disclaimer, the term of this patent is extended or adjusted under 35 U.S.C. 154(b) by 904 days.

(21) Appl. No.: **13/405,438**

(22) Filed: **Feb. 27, 2012**

Related U.S. Application Data

(60) Provisional application No. 61/447,461, filed on Feb. 28, 2011.

(51) **Int. Cl.**

F23G 5/20	(2006.01)
F23G 5/027	(2006.01)
F23B 30/04	(2006.01)
F27B 7/00	(2006.01)

(52) **U.S. Cl.**
CPC ***F23G 5/20*** (2013.01); ***F23B 30/04*** (2013.01); ***F23G 5/027*** (2013.01); ***F27B 7/00*** (2013.01); *F23G 2201/30* (2013.01); *F23H 2700/004* (2013.01)

(58) **Field of Classification Search**
USPC 110/226, 229, 230, 246, 276
See application file for complete search history.

(56) **References Cited**

U.S. PATENT DOCUMENTS

3,680,500	A	8/1972	Pryor	
3,734,037	A	5/1973	Martin	
3,794,565	A *	2/1974	Bielski et al.	110/254
3,838,015	A *	9/1974	Buchbinder et al.	110/246
4,520,738	A	6/1985	Takehara	
4,941,415	A	7/1990	Pope et al.	
4,976,206	A	12/1990	Steiner et al.	
5,018,457	A	5/1991	Brady et al.	
5,134,944	A	8/1992	Keller et al.	
5,230,211	A	7/1993	McMahon et al.	
5,245,114	A	9/1993	Forrester	
5,288,195	A	2/1994	McIntyre	
5,315,938	A	5/1994	Freller	
5,331,746	A	7/1994	Martin et al.	
5,401,481	A	3/1995	Rochelle et al.	
5,410,973	A *	5/1995	Kunstler et al.	110/246
5,425,850	A *	6/1995	Tanca et al.	110/238
5,560,304	A *	10/1996	Duchateau et al.	110/346
5,566,626	A *	10/1996	Schaefer et al.	110/246
5,711,233	A	1/1998	Martin et al.	
5,823,122	A	10/1998	Chronowski et al.	

(Continued)

Primary Examiner — David J Laux
(74) *Attorney, Agent, or Firm* — Honigman Miller Schwartz and Cohn LLP; Andrew N. Weber; Jonathan P. O'Brien

(57) **ABSTRACT**

The present invention provides a method of generating combustible gas from organic feedstock, such as the organic components of municipal waste, and a reactor therefor. The feedstock is processed through a plurality of reaction zones within the reactor, wherein the environment of each of the zones facilitates physical or chemical reactions that work to transform the organic feedstock into one or more combustible gases that can be burned for energy production.

20 Claims, 13 Drawing Sheets

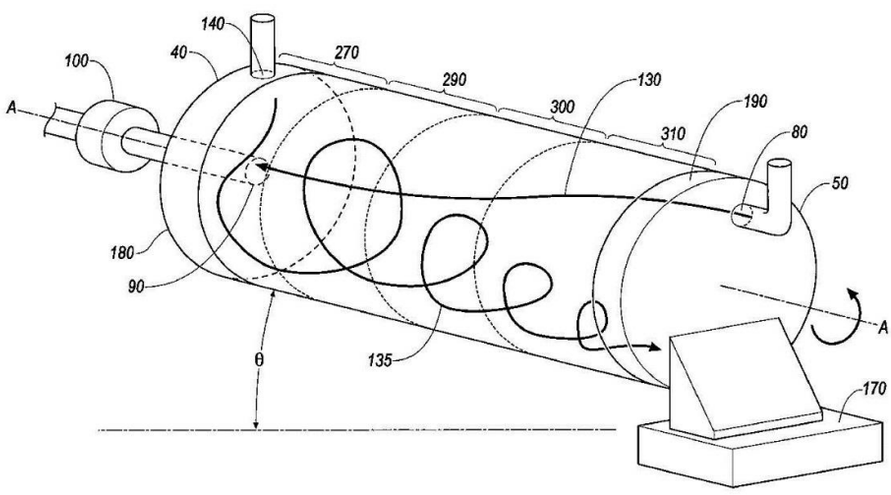

GPE LLC

Global cooperation

GPE LLC's gasification incineration system is an innovative green energy solution and international experience and global partnerships will help governments, communities and businesses to work together for a cleaner environment.

Unified goal

GPE LLC works with the communities to pursue changes in the energy from waste.
The goal is to implement a sustainable waste solution considering local conditions.

GPE LLC

Green Planet Ecosystems LLC
Orlando, FL U.S.A.
+1.863.500.0841
young.park@gpellc.us
www.gpellc.us